8" WSP General Arrangement Drawing
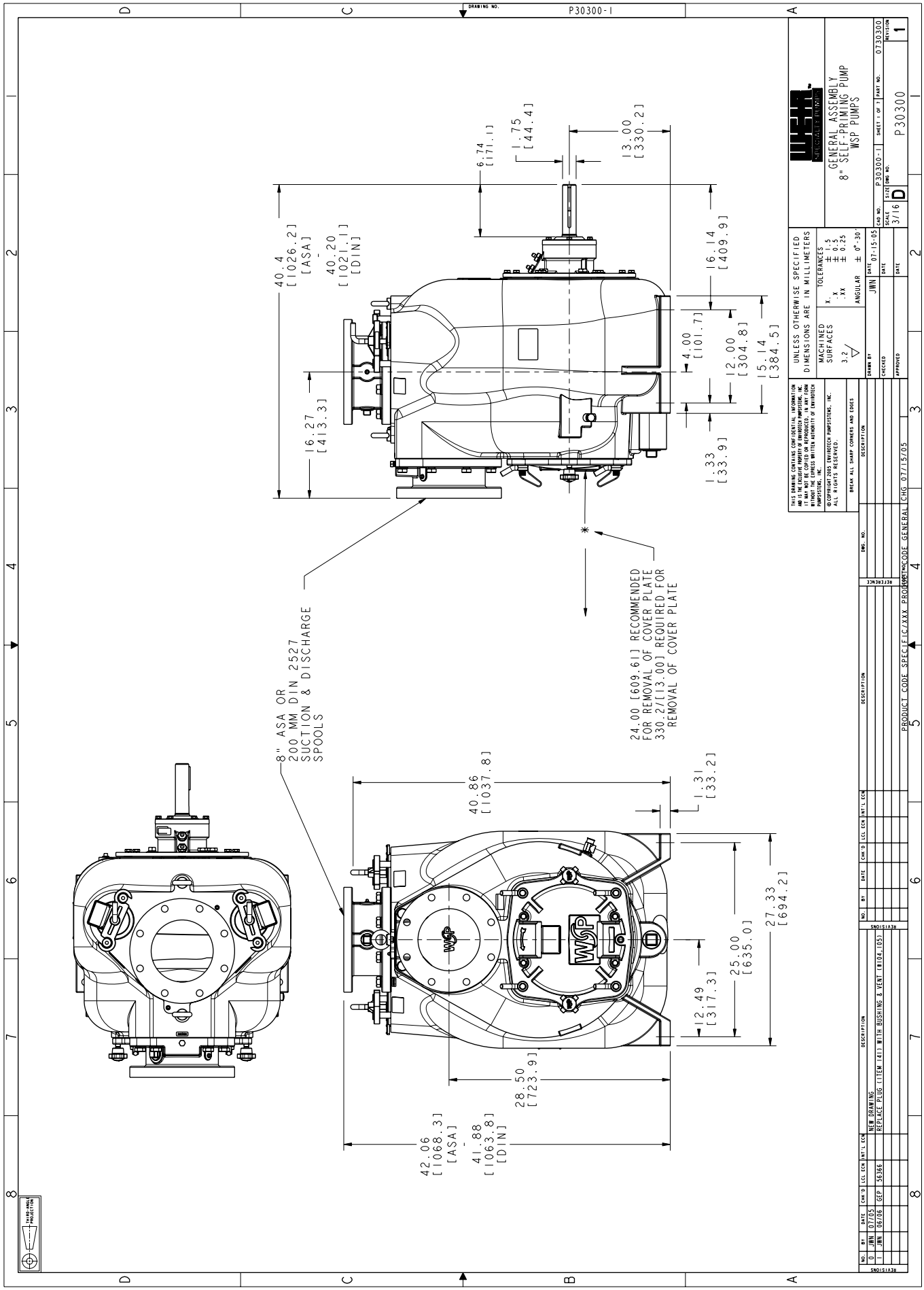
The WSP is Exclusively Distributed by EPG Pumps
1800 351 755
www.weirselfprimer.com.au